Wakanyeja Ta Nagi Ki Yuonihanpi (Honoring the Spirit of the Child)

Sina Ikikcu Win (Takes the Robe Woman)
Ethleen Iron Cloud-Two Dogs, M.S.
P.O. Box 294, Porcupine, SD 57772
Email: eictd77@gmail.com

Oinajin Topa/Four Stages of Life
LAKOTA WAY OF LIFE

NAGI YATA (spirit world)

Return to Spirit World

Pre-Birth +

PRE-BIRTH: Singing to unborn baby; mother is not exposed to anything negative; family and extended family looks out for mother and unborn baby.

Elder role includes providing teachings; ensuring social/custom/spiritual order

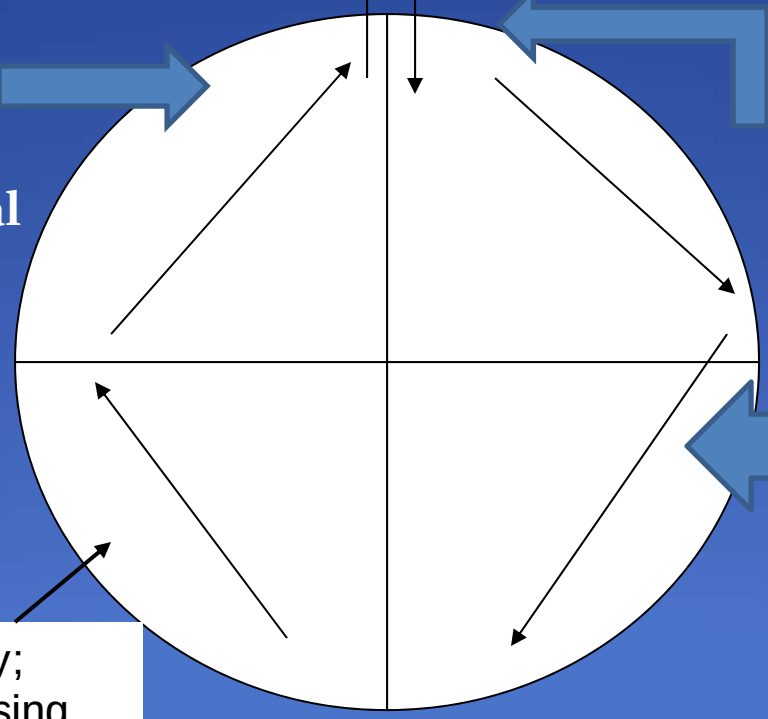

Iowicayujuntapi/cleaning of mouth by Grandmother; Path predicted for baby; Lakota name given soon after birth; Pe Wi Wi La (soft spot on head) protected

Age 50+

Age 12+

Isna Ti Awicalowan Pi; Wicasa Ihuni Pi – Rites of Passage

Establishes own family; begins process of passing on teachings

Age 21+

R. Two Dogs and E. Iron Cloud-Two Dogs, 2010

WOTAKUYE (kinship) – FOUNDATION OF LAKOTA SOCIETY

Oinajin Topa/Four Stages of Life Interrupted Journey

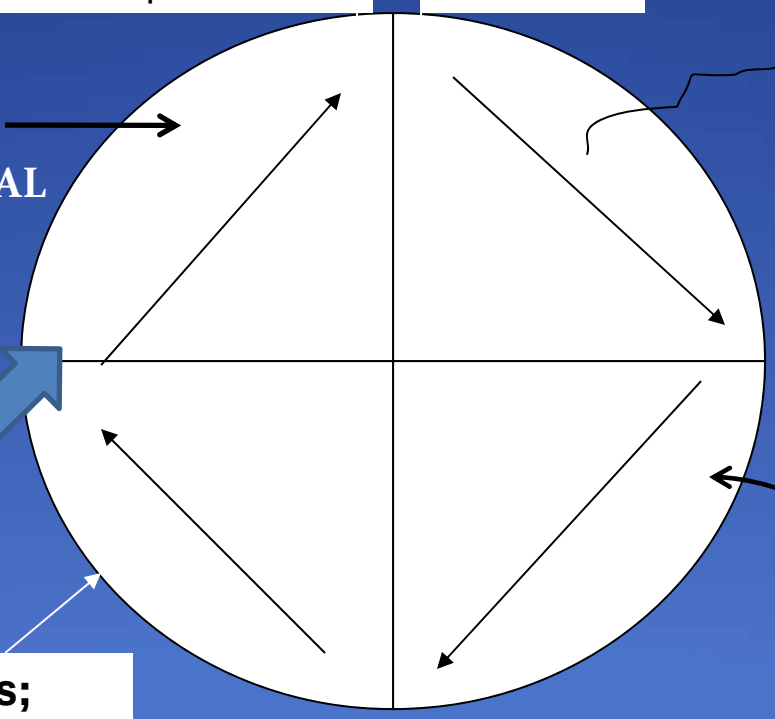

R. Two Dogs and E. Iron Cloud-Two Dogs, 2010

WOTAKUYE (kinship)– WEAKENED IN CONTEMPORARY LAKOTA SOCIETY

Tewicahila Pi Ogna Waunspewicakiya Pi

“Teaching with Love”
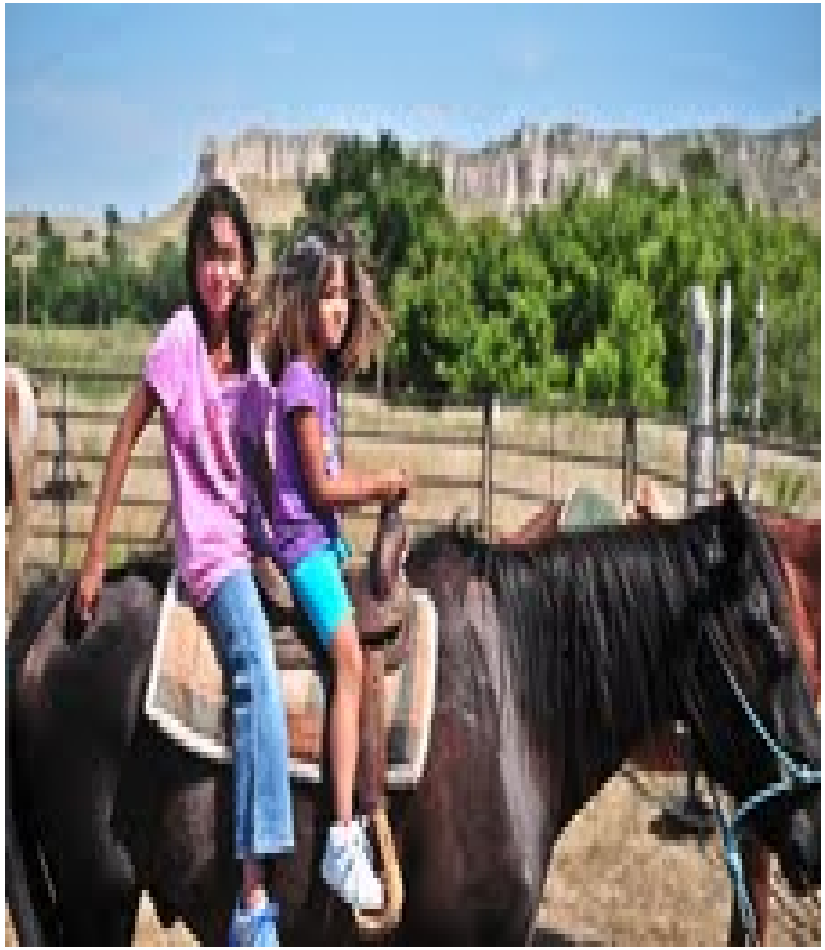
BROOKLYN
75